ITU WORLD CHAMPIONSHIPS
POWERMAN ZOFINGEN
LONG DISTANCE DUATHLON
Nº. 1 IN DUATHLON

Verpflegungsplan/ race nutrion

Long Distance

	SPONSER Products ®									
	COMPETITION Sports Drink	LONG ENERGY Sports Drink	HIGH ENERGY BAR	LIQUID ENERGY PLUS	SMOOTHIE TROPIC-MANGO	W a s s e r / Water	Coca Cola ®	Bananen / Bananas	ERDINGER ® alkoholfreies Bier Beer without alcohol	Pasta (mit Tomaten Sauce) (with tomato sauce)
1.Lauf / 1st run										
Transition zone, km 5	x		x	x		x				
Transition zone, km 10	x		x	x		x				
Rad / Bike										
Rothrist, km 10		x	x	x		x		x		
Reitnau, km 35		x	x	x		x		x		
Rothrist, km 60		x	x	x		x		x		
Reitnau, km 85		x	x	x		x		x		
Rothrist, km 110		x	x	x		x		x		
Reitnau, km 135		x	x	x		x		x		
2.Lauf / 2nd run										
Transition zone, km 0	x		x	x		x	x	x		
Stadt, km 1.5	x		x	x		x	x	x		
Stadt, km 3.5	x		x	x		x	x	x		
Transition zone, km 5	x		x	x		x	x	x		
Heitern Mitte, km 6.5	x		x	x		x	x	x		
Heitern Mitte, km 8	x		x	x		x	x	x		
Transition zone, km 10	x		x	x		x	x	x		
Stadt, km 11.5	x		x	x		x	x	x		
Stadt, km 13.5	x		x	x		x	x	x		
Transition zone, km 15	x		x	x		x	x	x		
Heitern Mitte, km 16.5	x		x	x		x	x	x		
Heitern Mitte, km 18	x		x	x		x	x	x		
Transition zone, km 20	x		x	x		x	x	x		
Stadt, km 21.5	x		x	x		x	x	x		
Stadt, km 23.5	x		x	x		x	x	x		
Transition zone, km 25	x		x	x		x	x	x		
Heitern Mitte, km 26.5	x		x	x		x	x	x		
Heitern Mitte, km 28	x		x	x		x	x	x		
Ziel / Finish		x	x		x	x	x	x	x	x

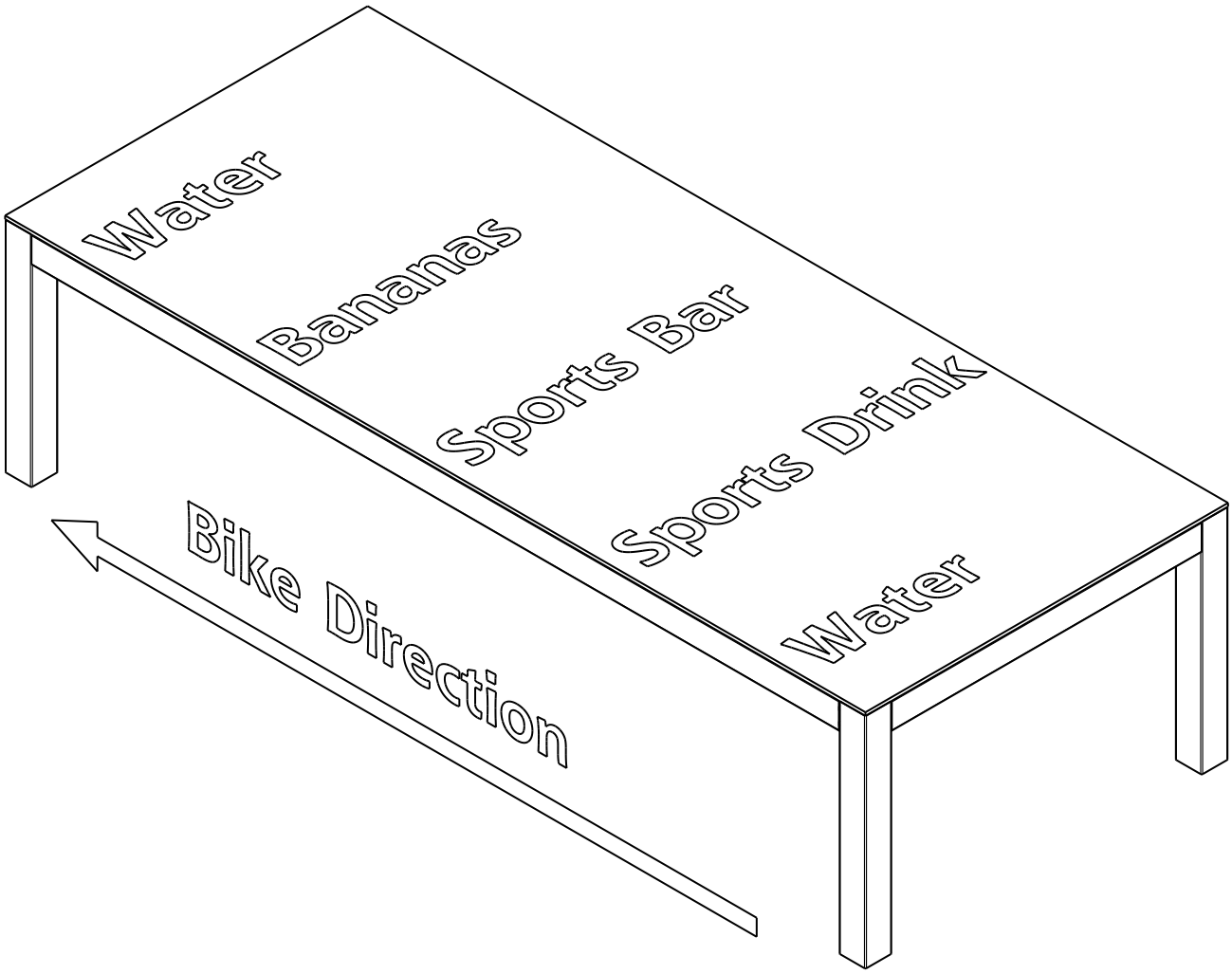
Water
Bananas
Sports Bar
Sports Drink
Water
Bike Direction

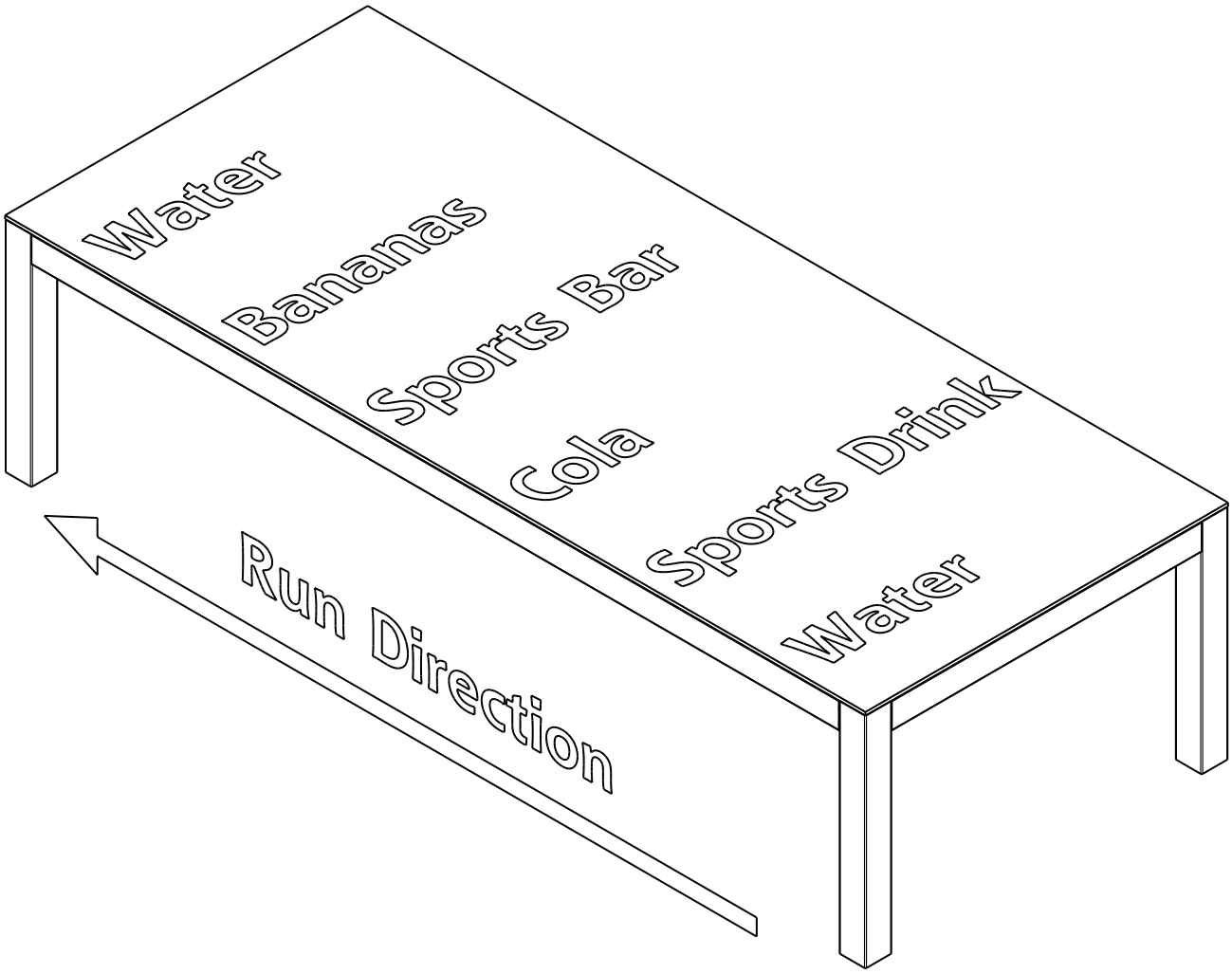
Water
Bananas
Sports Bar
Cola
Sports Drink
Water
Run Direction